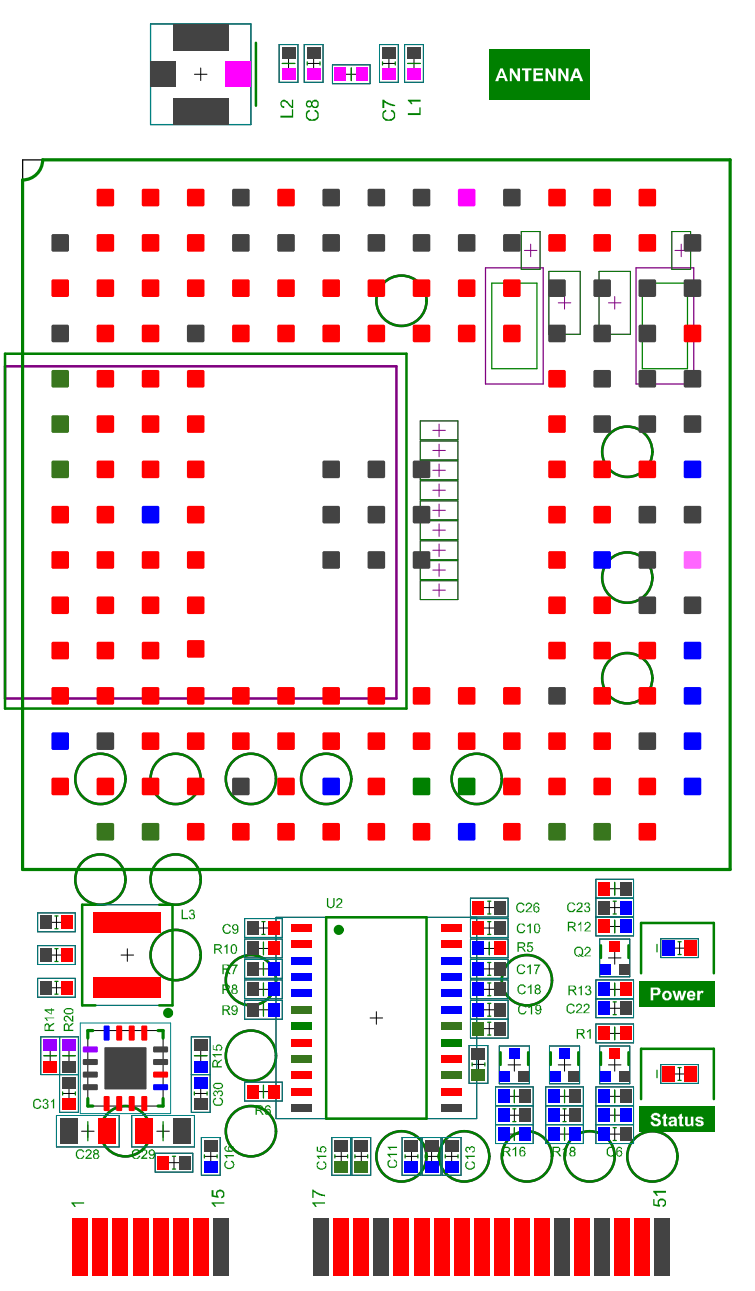
ANTENNA
L2
C8
C7
L1
L3
U2
C9
R10
R7
R8
R9
R14
R20
R15
C30
C31
C28
C29
R6
C16
C15
C11
C13
C26
C10
R5
C17
C18
C19
C23
R12
Q2
R13
C22
R1
R16
R18
C6
Power
Status
1
15
17
51

B1017CA-PCIe

Micro SIM Tray

DEBUG_TX

C32

C32

F1B1

F1B2

C24

C34

C1

D1

C2

C3

D2

C5

D4

C4

D3

DEBUG_RX

M09

1V8_PMON

VUSB

TX_AUX

RX_AUX

USB_BOOT

GPIO_09

USB D-

USB D+

3V3

TX

RX

P_EN

NOM

TXTAMP

GND

BT

TCXO

FCXO_EN

NMOS

GND

VCC

B1017CA-PCIe

Micro SIM Tray

DEBUG_TX

C32

C32

F1B1

F1B2

C24

C34

C1

D1

C2

C3

D2

C5

D4

C4

D3

DEBUG_RX

M09

1V8_PMON

VUSB

TX_AUX

RX_AUX

USB_BOOT

GPIO_09

USB D-

USB D+

3V3

TX

RX

P_EN

NOM

TXTAMP

GND

BT

TCXO

FCXO_EN

NMOS

GND

VCC

B1017CA-PCIe
Micro SIM Tray
DEBUG_TX
C32
C34
FB1
FB2
C24
DEBUG_RX
C1
D1
C2
C3
D2
C5
D4
C4
D3
M09
1V8_PMON
VUSB
TX_AUX
RX_AUX
USB_BOOT
GPIO_09
USB D-
USB D+
3V8
TX
RX
GND
VCC
P_EN
NOM
YTAEMAC
BGN
FB1
FB2
FB3
NMOS
EEPROM_EN